ÖLFLEX® SOLAR XLR-E I+E

E-beam crosslinked EN 50618 solar cable - 62930 IEC 131 type

Info

- TÜV approved to EN 50618 (H1Z2Z2-K), and to IEC 62930

Benefits

- Reduction of flame propagation and of toxic combustion gases in the event of fire
- Robust against mechanical impacts
- Exact quantity control during installation by meter marking on the cable sheath

Application range

- For the cabling between the solar modules and as extension cable between the module strings and the DC/AC inverter
- For outdoor applications
- Underground use inside protection conduits/ ducts for burial in combined case of (1) secure dissipation of water(logging) from outer cable surface, as well as (2) laying of conduit/ duct in professionally built cable trench with at least 50 cm of back-fill soil (70 cm underneath roads), above indicating tape, above covering plastic slab, above at least 10 cm of covering sand layer, above the conduit/ duct laid on at least 10 cm high sand bed layer (cf.: VDE 0891-6, Section 4.2)
- Long-term permanent storage/ operation in water not permitted
- Not suitable for direct burial, Installation according to IEC 60364-5-52, respectively HD 60364-5-52

Product features

- Weathering/ UV resistant per Annexes E of EN 50618 and IEC 62930, furthermore ozone resistant per EN 50618 (...) as well as per IEC 62930 in conjunction with IEC 60811-403
- Flame retardant per IEC 60332-1-2; Halogen-free and non-corrosive per Annexes B and C of EN 50525-1, Annex B of IEC 62821-1, IEC 62821-2, IEC 60754-1/ EN 60754-1, EN 50267-2-1, IEC 60754-2/ EN 60754-2, EN 50267-2-2 and IEC 60684-2/ EN 60684-2; Low Smoke Density in the event of fire per EN 50618 in conjunction with EN 61034-2 and per IEC 62930 in conjunction with IEC 61034-2
- Good notch and abrasion resistance
- Temporary, non-permanent immersion in water (AD7) acc. to EN 50618, HD 60364-5-51, EN 60529

Norm references / Approvals

- H1Z2Z2-K approved by TÜV acc. to EN 50618 (1.5 mm² to 300 mm²)
- 62930 IEC 131 approved by TÜV acc. to IEC 62930 (1.5 mm² to 300 mm²)

Product Make-up

- Fine-wire, tinned-copper conductor
- Core insulation made of electron beam cross-linked copolymer
- Colour of core insulation: white
- Single-core versions only
- Outer sheath made of electron beam cross-linked copolymer
- Outer sheath colour Black or Blue
- From a technical standpoint comparable versions with Red outer colouring accessible under product name "ÖLFLEX® SOLAR XLR-E" without "I+E" in the product name, and just with H1Z2Z2-K approval by TÜV per EN 50618, not with IEC 62930 approval:
  –>Red-only outer sheath, for instance:
  2.5 mm² = #1023803;
  4 mm² = #1023677;
  6 mm² = #1023676;
  10 mm² = #1023804;
  16 mm² = #1023805; ...
  –>Black sheath with Red colour stripe within part number circles #1023666 to #1023670 as well as #1023814 to #1023824, for example:
  2.5 mm² = #1023666;
  4 mm² = #1023667;
  6 mm² = #1023668;
  10 mm² = #1023669;
  16 mm² = #1023670;

Technical data

Classification ETIM 5/6
ETIM 5.0/6.0 Class-ID: EC001578
ETIM 5.0/6.0 Class-Description: Flexible cable

Conductor stranding
Fine wire according to VDE 0295, class 5/IEC 60228 class 5

Minimum bending radius
4 x outer diameter for outer diameter </= 8 mm.
5 x outer diameter for outer diameter > 8 mm.

Nominal voltage
AC U_0/U: 1.0/1.0 kV
DC U_0/U: 1.5/1.5 kV

Max. permissible DC operating voltage: 1.8 kV

Test voltage
AC 6500 V

Current rating
In IEC installations: IEC 62930, appendix A (for grouping/ clustering of circuits: reduction factors per IEC 60364-5-52)
In EN installations in Europe: EN 50618, appendix A (for grouping/ clustering of circuits: reduction factors per HD 60364-5-52)

Temperature range
For PV installations: -40°C (stationary) or -25°C (flexible) to +90°C.
20,000 hours (IEC 60216/ EN 60216): Max. +120°C per IEC 62930 and EN 50618.

Article number	Number of cores and mm² per conductor	Outer diameter [mm]	Copper index (kg/km)	Weight (kg/km)
Black outer sheath				
1023714	1 X 1.5	4.6	14.4	40
1023715	1 X 2.5	5.0	24.0	50
1023716	1 X 4.0	5.4	38.4	70
1023717	1 X 6.0	6.0	57.6	90
1023718	1 X 10.0	7.2	96.0	140
1023719	1 X 16.0	8.7	153.6	210
1023720	1 X 25.0	10.6	240.0	320
1023721	1 X 35.0	12.2	336.0	430
1023722	1 X 50.0	14.4	480.0	601
1023723	1 X 70.0	16.4	672.0	819
Blue outer sheath				
1023734	1 X 1.5	4.6	14.4	40
1023735	1 X 2.5	5.0	24.0	50
1023736	1 X 4.0	5.4	38.4	70

Article number	Number of cores and mm² per conductor	Outer diameter [mm]	Copper index (kg/km)	Weight (kg/km)
1023737	1 X 6.0	6.0	57.6	90
1023738	1 X 10.0	7.2	96.0	140
1023739	1 X 16.0	8.7	153.6	210
1023740	1 X 25.0	10.6	240.0	320
1023741	1 X 35.0	12.2	336.0	430
1023742	1 X 50.0	14.4	480.0	601
1023743	1 X 70.0	16.4	672.0	819

Unless specified otherwise, the shown product values are nominal values. Detailed values (e.g. tolerances) are available upon request.
Copper price basis: EUR 150/100 kg. Refer to catalogue appendix T17 for the definition and calculation of copper-related surcharges.
Please find our standard lengths at: www.lappkabel.de/en/cable-standardlengths
Photographs and graphics are not to scale and do not represent detailed images of the respective products.

Similar products

- ÖLFLEX® SOLAR XLWP refer to page [P292086]
- ÖLFLEX® SOLAR XLWP I+E refer to page [P490675]

Accessories

- EPIC® CRIMPTOOL refer to page [P208769]
- KNIPEX Cable shear refer to page [P305271]
- EPIC® SOLAR 4 M refer to page [P171267]
- EPIC® SOLAR 4 F refer to page [P171767]
- KS 20 cable shears refer to page [P1249]

Application

ÖLFLEX® SOLAR XLR-E [I+E] cables are weather- and UV-resistant photovoltaic cables.
These cross-linked, halogen-free and double-insulated solar cables are suitable for permanent outdoor use and especially for the interconnection of grounded and ungrounded photovoltaic power systems. They are applicable for the connection of solar panels among themselves and as extension cable between the individual module strings or the DC/AC inverter.

Recommended use of cables for PV systems acc. to IEC 62930 and EN 50618:
Intended for use in PV installations e.g. acc. to IEC 60364-7-712 resp. HD 60364-7-712.
They are intended for permanent use outdoor and indoor, for free movable, free hanging and fixed installation.
It is also permitted to install the cables in conduit or trunking systems.
They are not intended for direct burial.
Halogen free low smoke cables are intended to reduce the risks for people and goods in the event of fire, for example in buildings.
They are suitable for the application in /at equipment with protective insulation (protection class II).
They are inherently short-circuit and earth fault proof acc. to IEC 60364-5-52.
The expected period of use under normal usage conditions as specified in IEC 62930 and EN 50618 is at least 25 years.

The cable should be installed acc. to VDE 0100 - 520, IEC 60364-5-52, EN 50174-1 or comparable standards.
Long-term, permanent storage or constant use of the cables in or underwater is not permitted.
It has to be ensured that no long-term contact with water will occur and that any waterlogging is sure to be drawn away.

Design

Design	Sheathed single core cable acc. to IEC62930 and EN 50618
Code Designation 1x1.5 mm² to 1x70mm²	62930 IEC 131 H1Z2Z2-K
Certification	TÜV Rheinland certificate with No. R 50462071 (62930 IEC 131) TÜV Rheinland certificate with No. R 50345247 (H1Z2Z2-K)
Conductor	Fine wire strands of tinned copper acc. to IEC 60228, conductor class 5
Core insulation	Electron beam cross-linked polymer compound acc. to IEC 62930 and EN 50618, halogen free Colour: White
Outer sheath	Electron beam cross-linked Co-Polymer acc. to IEC 62930 and EN 50618, halogen free Colour: black or blue

Electrical properties

Rated voltage U_0/U	1.0/1.0 kV AC RMS acc. to IEC 62930 and EN 50618 1.5/1.5 kV DC acc. to IEC 62930 and EN 50618
Max. permissible operating voltage	1.8 kV DC acc. to IEC 62930 and EN 50618
Test voltage	6.5 kV AC acc. to IEC 62930 and EN 50618
Current carrying rating	IEC 62930, Table A.3 & A.4 and EN 50618 , Table A.3 & A.4

Mechanical and thermal properties

Minimum ambient temperature fixed installation	-40 °C
Conductor temperature, fixed installation	up to +90 °C acc. to IEC 62930 and EN 50618
Conductor temperature, fixed installation	up to +120 °C (20.000 hours acc. to IEC 60216-2) acc. to IEC 62930 and EN 50618
Minimum temperature, during installation and handling	-25 °C acc. to IEC 62930 and EN 50618
Max. storage temperature	+45° C acc. to IEC 62930 +40° C acc. to EN 50618
Max. short circuit temperature	+250° C (5s) acc. to IEC 62930 and EN 50618
Minimum bending radius, occasional flexing	15 x outer cable diameter
Minimum bending radius, stationary use	4 x outer cable diameter for OD ≤ 8 mm 5 x outer cable diameter for OD > 8 mm
Weather/UV resistance	acc. to IEC 62930, Appendix E and EN 50618, Appendix E
Ozone resistance	acc. to IEC 62930 and EN 50618
Halogen-free	acc. to IEC 62930 and EN 50618 acc. to IEC 60754-1; IEC 60754-2
Smoke density	acc. to IEC 62930 and EN 50618 acc. to IEC 61034-2 resp. EN 61034-2
Flame retardance	acc. to IEC 60332-1-2 resp. EN 60332-1-2
Acid and alkali resistance	acc. to IEC 62930 and EN 50618 acc. to EN 60811-404 (oxalic acid and sodium hydroxide solution)
General requirements	These cables are conform to the EU-Directive 2014/35/EU (Low Voltage Directive)
Environmental information	These cables meet the substance-specific requirements of the EU Directive 2011/65/EU (RoHS).

ÖLFLEX® SOLAR XLWP I+E

E-beam crosslinked EN 50618 solar cable optimized for water - 62930 IEC 131 type

Info

- Optimised cable design - high volume resistance even after long-term period in water
- TÜV-certified to EN 50618 and IEC 62930
- Burial-related, mechanical UL 854 Impact-Resistance Test

Benefits

- Reduction of flame propagation and of toxic combustion gases in the event of fire
- The alternative for water coverage, e.g. due to elevated water line caused by flooding
- Free burial in professionally built cable trench and in protective, buried, rigid tube/ duct with internal build-up of damp/ water, thanks to transverse AD8 watertightness
- Free burial in professionally built cable trench thanks to increased, mechanical robustness
- Exact quantity control during installation by meter marking on the cable sheath

Application range

- Photovoltaic systems with DC system voltage up to 1800 V to ground
- For the cabling between the solar modules and as extension cable between the module strings and the DC/AC inverter
- Flexible or building-integrated PV systems
- Underground use without protection conduit/ duct in professionally built cable trench with at least 50 cm of back-fill soil (70 cm underneath roads), above indicating tape, above covering plastic slab, above at least 10 cm of covering sand layer, above the cable laid on at least 10 cm high sand bed layer (cf.: VDE 0891-6, Section 4.2)
- Indirect burial inside buried, protective, rigid tube/ duct, including potential waterlogging

Product features

- Weathering/ UV resistant per Annexes E of EN 50618 and IEC 62930, furthermore ozone resistant per EN 50618 (...) as well as per IEC 62930 in conjunction with IEC 60811-403
- Flame retardant per IEC 60332-1-2; Halogen-free and non-corrosive per Annexes B and C of EN 50525-1, Annex B of IEC 62821-1, IEC 62821-2, IEC 60754-1/ EN 60754-1, EN 50267-2-1, IEC 60754-2/ EN 60754-2, EN 50267-2-2 and IEC 60684-2/ EN 60684-2; Low Smoke Density in the event of fire per EN 50618 in conjunction with EN 61034-2 and per IEC 62930 in conjunction with IEC 61034-2
- Burial-related, mechanical Impact-Resistance Test of Single-Conductor Type USE and USE-2 cables [Underground Service Entrance Cables] per UL 854, Section 23, conducted; ...further mechanical tests...
- XLWP = X-Linked + Water-Proof (Permanent water contact AD8 acc. to IEC 60364-5-51/ HD 60364-5-51, 1 mtr. in max. submersion depth @ temperature of widely unmoved water between 5 °C and 40 °C), Proven electron beam cross-linked quality - good notch and abrasion resistance

Norm references / Approvals

- H1Z2Z2-K approved by TÜV acc. to EN 50618 (2.5 mm² to 300 mm²)
- 62930 IEC 131 approved by TÜV acc. to IEC 62930 (2.5 mm² to 300 mm²)

Product Make-up

- Fine-wire, tinned-copper conductor
- Core insulation made of electron beam cross-linked copolymer
- Colour of core insulation: white
- Single-core versions only
- Outer sheath made of electron beam cross-linked copolymer
- Outer sheath colour Black or Blue

Technical data

Classification ETIM 5/6
ETIM 5.0/6.0 Class-ID: EC001578
ETIM 5.0/6.0 Class-Description: Flexible cable

Conductor stranding
Fine wire according to VDE 0295, class 5/IEC 60228 class 5

Minimum bending radius
4 x outer diameter for outer diameter </= 8 mm.
5 x outer diameter for outer diameter > 8 mm.

Nominal voltage
AC U_0/U: 1.0/1.0 kV
DC U_0/U: 1.5/1.5 kV

Max. permissible DC operating voltage: 1.8 kV

Test voltage
AC 6500 V

Current rating
In IEC installations: IEC 62930, appendix A (for grouping/ clustering of circuits: reduction factors per IEC 60364-5-52)
In EN installations in Europe: EN 50618, appendix A (for grouping/ clustering of circuits: reduction factors per HD 60364-5-52)

Temperature range
For PV installations: -40°C (stationary) or -25°C (flexible) to +90°C.
20,000 hours (IEC 60216/ EN 60216): Max. +120°C per IEC 62930 and EN 50618.

Article number	Number of cores and mm² per conductor	Outer diameter [mm]	Copper index (kg/km)	Weight (kg/km)
Black outer sheath				
1023629	1 X 2.5	5.4	24.0	50
1023630	1 X 4.0	5.8	38.4	68.1
1023631	1 X 6.0	6.4	57.6	91.6
1023632	1 X 10.0	7.6	96.0	140
1023633	1 X 16.0	9.1	153.6	210
1023634	1 X 25.0	11.2	240.0	320
1023635	1 X 35.0	12.8	336.0	440
1023636	1 X 50.0	15.0	480.0	615
1023637	1 X 70.0	17.0	672.0	834
Blue outer sheath				
1023647	1 X 2.5	5.4	24.0	50
1023648	1 X 4.0	5.8	38.4	68.1
1023649	1 X 6.0	6.4	57.6	91.6
1023756	1 X 10.0	7.6	96.0	140

Article number	Number of cores and mm² per conductor	Outer diameter [mm]	Copper index (kg/km)	Weight (kg/km)
1023678	1 X 16.0	9.1	153.6	210
1023679	1 X 25.0	11.2	240.0	320
1023680	1 X 35.0	12.8	336.0	440
1023681	1 X 50.0	15.0	480.0	615
1023682	1 X 70.0	17.0	672.0	834

Unless specified otherwise, the shown product values are nominal values. Detailed values (e.g. tolerances) are available upon request.
Copper price basis: EUR 150/100 kg. Refer to catalogue appendix T17 for the definition and calculation of copper-related surcharges.
Please find our standard lengths at: www.lappkabel.de/en/cable-standardlengths
Photographs and graphics are not to scale and do not represent detailed images of the respective products.

Accessories

- KNIPEX Cable shear refer to page [P305271]
- EPIC® SOLAR 4 M refer to page [P171267]
- EPIC® SOLAR 4 F refer to page [P171767]
- UNIVERSAL STRIP stripping tool refer to page [P1257]
- KS 20 cable shears refer to page [P1249]

Application

ÖLFLEX® SOLAR XLWP [I+E] cables are weather-, UV-resistant photovoltaic cables. Thanks to optimized cable design, a constant, remarkable volume resistivity can be ensured even after long-term period in uncontaminated water.
These cross-linked, halogen-free and double-insulated solar cables are suitable for permanent outdoor use and especially for the interconnection of grounded and ungrounded photovoltaic power systems. They are applicable for the connection between solar panels and as extension cable between the individual module strings or the DC/AC inverter.

Recommended use of cables for PV systems acc. to IEC 62930 and EN 50618:
Intended for use in PV installations e.g. acc. to IEC 60364-7-712 resp. HD 60364-7-712.
They are intended for permanent use outdoor and indoor, for free movable, free hanging and fixed installation.
It is also permitted to install the cables in conduit or trunking systems. Halogen free low smoke cables are intended to reduce the risks for people and goods in the event of fire, for example in buildings.
They are suitable for the application in /at equipment with protective insulation (protection class II).
They are inherently short-circuit and earth fault proof acc. to IEC 60364-5-52.
The expected period of use under normal usage conditions as specified in IEC 62930 and EN 50618 is at least 25 years.

Based on UL's Crushing, Impact Resistance and Crushing Resistance Test, ÖLFLEX® SOLAR XLWP [I+E] cables will be suitable for the installation underground if the cable is laid in a cable trench acc. to VDE 0100-520, IEC 60364-5-52 or comparable standards. They are not intended for direct burial.
For underground use, installation in conduits or for open wiring even in water, where the cables can be / are exposed to uncontaminated water (salt or fresh water), the use is only permitted under the following conditions:

Submersion depth, max.	1 m
Water temperature	5 °C up to 40 °C

Additional tensile force or shearing during installation and operation has to be ruled out.

Design

Design	Sheathed single core cable acc. to IEC62930 and EN 50618
Code Designation 1x2.5 mm² to 1x70mm²	62930 IEC 131 H1Z2Z2-K
Certification	TÜV Rheinland certificate with No. R 50462071 (62930 IEC 131) TÜV Rheinland certificate with No. R 50345247 (H1Z2Z2-K)
Conductor	Fine wire strands of tinned copper acc. to IEC 60228, conductor class 5
Core insulation	Electron beam cross-linked polymer compound acc. to IEC 62930 and EN 50618, halogen free Colour: White
Outer sheath	Electron beam cross-linked Co-Polymer acc. to IEC 62930 and EN 50618, halogen free Colour: black or blue

Electrical properties

Rated voltage U_0/U	1.0/1.0 kV AC RMS acc. to IEC 62930 and EN 50618 1.5/1.5 kV DC acc. to IEC 62930 and EN 50618
Max. permissible operating voltage	1.8 kV DC acc. to IEC 62930 and EN 50618
Test voltage	6.5 kV AC acc. to IEC 62930 and EN 50618

Current carrying capacity	IEC 62930, Table A.3 & A.4 and EN 50618 , Table A.3 & A.4
DC voltage resistant in water after ageing	EN 50395, Section 9 (3 % NaCl), after water submersion @ 0.08 bar in pressure

Mechanical and thermal properties

Minimum ambient temperature fixed installation	-40 °C
Conductor temperature, fixed installation	up to +90 °C acc. to IEC 62930 and EN 50618
Conductor temperature, fixed installation	up to +120 °C (20.000 hours acc. to IEC 60216-2) acc. to IEC 62930 and EN 50618
Minimum temperature, during installation and handling	-25 °C acc. to IEC 62930 and EN 50618
Max. storage temperature	+45° C acc. to IEC 62930 +40° C acc. to EN 50618
Max. short circuit temperature	+250° C (5s) acc. to IEC 62930 and EN 50618
Minimum bending radius, occasional flexing	15 x outer cable diameter
Minimum bending radius, stationary use	4 x outer cable diameter for OD ≤ 8 mm 5 x outer cable diameter for OD > 8 mm
Weather and UV resistance	acc. to IEC 62930, Appendix E and EN 50618, Appendix E
Ozone resistance	acc. to IEC 62930 and EN 50618
Halogen-free	acc. to IEC 62930 and EN 50618 acc. to IEC 60754-1 and IEC 60754-2
Smoke density	acc. to IEC 62930 and EN 50618 acc. to IEC 61034-2 resp. EN 61034-2
Flame retardance	acc. to IEC 60332-1-2 resp. EN 60332-1-2
Acid and alkaline resistance	acc. to IEC 62930 and EN 50618 acc. to EN 60811-404 (oxalic acid and sodium hydroxide)
Underground use	acc. to UL 1277, Section 19 (Crushing Test) acc. to UL 854, Section 23 (Impact Resistance Test) acc. to UL 854, Section 24 (Crushing Resistance Test)
Presence of water	Permanent submersion AD8 acc. to IEC 62440 in unmoved water up to 1 m maximum submersion depth, and within a water temperature range from 5 °C up to 40 °C
EU Directives	These cables are conform to the EU-Directive 2014/35/EU (Low Voltage
Environmental information	These cables meet the substance-specific requirements of the EU Directive 2011/65/EU (RoHS).

UNITRONIC® Li2YCY (TP)

Screened data transmission cable mit PE core insulation, 7-wire strands and twisted pairs

Info

- Cables for RS485/RS422

UNITRONIC® Li2YCY (TP) fine-wire

Screened data transmission cable mit PE core insulation, fine wire strands and twisted pairs

Info

- Cables for RS485/RS422

UNITRONIC® Li2YCYv (TP)

Screened data transmission cable mit PE core insulation, reinforced outer sheath and twisted pairs

Info

- Cables for RS485/RS422

Benefits

- 7-wire stranded conductor (UNITRONIC® Li2YCY (TP) and UNITRONIC® Li2YCYv (TP) can be used for Maxi TERMI-POINT® wiring
- Overall braid minimises electrical interference
- Decoupling of circuits by means of twisted-pair (TP) design (crosstalk effects)

Application range

- Particularly suitable for wiring data systems with transmission rates up to 10 Megabits per second, and is qualified for the RS422 and RS485 interfaces.
- For fixed and limited flexible installation
- Can be used in dry or damp rooms
- Signal-, control- and measuring cable,for transmission of low, sensitive signals and high bit rates
- **UNITRONIC® Li2YCYv (TP)** with its reinforced, nominal/ minimum average wall thickness of at least 1.8 mm of the black outer sheath (Yv) is designed for indoor and outdoor use as well as for applications where a reinforced outer sheath may turn out to be advantageous

Product features

- Flame-retardant according IEC 60332-1-2

Norm references / Approvals

- Based on VDE 0812

Product Make-up

UNITRONIC® Li2YCY (TP)

- 7-wire bare stranded copper conductor
- Core insulation made of polyethylene (PE)
- TP structure
- Tinned-copper braiding
- Outer sheath made of PVC
  Outer sheath colour: pebble grey (RAL 7032)

UNITRONIC® Li2YCY (TP) fine-wire

- Conductors: Finely stranded bare copper
- Core insulation made of polyethylene (PE)
- TP structure
- Tinned-copper braiding
- Outer sheath made of PVC
  Outer sheath colour: pebble grey (RAL 7032)

UNITRONIC® Li2YCYv (TP)

- 7-wire bare stranded copper conductor
- Core insulation made of polyethylene (PE)
- TP structure
- Tinned-copper braiding
- Wall thickness of the outer sheath is increased ("Yv")
- Outer sheath colour: black (RAL 9005)

Technical data

Classification ETIM 5/6
ETIM 5.0/6.0 Class-ID: EC000104
ETIM 5.0/6.0 Class-Description:
Control cable

Core identification code
DIN 47100, refer to Appendix T9

Mutual capacitance
At 800 Hz: max. 60 nF/km

Peak operating voltage
(not for power applications) 250 V

Inductivity
approx. 0.65 mH/km

Conductor stranding
UNITRONIC® Li2YCY (TP)
Stranded conductor, based on VDE 0881, 7-wire
UNITRONIC® Li2YCY (TP) fine-wire
Stranded conductor, fine-wire
UNITRONIC® Li2YCYv (TP)
Stranded conductor, based on VDE 0881, 7-wire

Minimum bending radius
Occasional flexing: 15 x outer diameter
Fixed installation: 6 x outer diameter

Short-range crosstalk attenuation
Up to 1 MHz min. 50 dB
Up to 10 MHz min. 40 dB

Test voltage
Core/core: 2000 V
Core/screen: 1000 V

Characteristic impedance
100 ± 15 Ω (> 1 MHz)

Temperature range
Occasional flexing: -5°C to +70°C
Fixed installation: -40°C to +80°C

Article number	Number of pairs and mm² per conductor	Outer diameter [mm]	Copper index (kg/km)	Weight (kg/km)
UNITRONIC® Li2YCY (TP)				
0031320	2 x 2 x 0,22	6.5	24.2	59
0031321	3 x 2 x 0,22	7.1	28.6	66
0031322	4 x 2 x 0,22	7.3	34.2	78
0031323	8 x 2 x 0,22	9.1	70	125
0031324	10 x 2 x 0,22	10.4	76	143
0031335	1 x 2 x 0,34	5.8	20	44
0031325	2 x 2 x 0,34	7.7	34.1	79
0031326	3 x 2 x 0,34	8.4	43	89
0031327	4 x 2 x 0,34	8.7	47	101
0031328	8 x 2 x 0,34	11	85.8	176
0031336	1 x 2 x 0,5	6.3	29	53
0031330	2 x 2 x 0,5	8.5	37	85
0031331	3 x 2 x 0,5	9.3	55	105
0031332	4 x 2 x 0,5	9.6	60	122
0031333	8 x 2 x 0,5	12.7	113.3	213
0031334	10 x 2 x 0,5	14.8	154	261
UNITRONIC® Li2YCY (TP) fine-wire				
0031370	1 x 2 x 0,25	5.7	14	38
0031371	2 x 2 x 0,25	6.9	28	43
0031372	3 x 2 x 0,25	7.5	39.6	64
0031373	5 x 2 x 0,25	8.3	50	93
UNITRONIC® Li2YCYv (TP) black for outdoor installation and direct burial, 7-wire				
0031350	2 x 2 x 0,22	8.1	24.2	79
0031351	3 x 2 x 0,22	8.7	28.6	93
0031352	4 x 2 x 0,22	8.9	34.2	100
0031353	8 x 2 x 0,22	10.7	70	156
0031354	10 x 2 x 0,22	12	76	185
0031365	1 x 2 x 0,34	7.4	20	69
0031355	2 x 2 x 0,34	9.3	34.1	102
0031356	3 x 2 x 0,34	10	43	117
0031357	4 x 2 x 0,34	10.3	52.8	130
0031358	8 x 2 x 0,34	12.6	85.8	206
0031366	1 x 2 x 0,5	7.9	29	79
0031360	2 x 2 x 0,5	10.1	37	120
0031361	3 x 2 x 0,5	10.9	55	142
0031362	4 x 2 x 0,5	11.2	60	160
0031363	8 x 2 x 0,5	13.9	113.3	251
0031364	10 x 2 x 0,5	16	148	303

Unless specified otherwise, the shown product values are nominal values. Detailed values (e.g. tolerances) are available upon request.
Copper price basis: EUR 150/100 kg. Refer to catalogue appendix T17 for the definition and calculation of copper-related surcharges.
Please find our standard lengths at: www.lappkabel.de/en/cable-standardlengths
Packaging size: coil ≤ 30 kg or ≤ 250 m, otherwise drum
Please specify the preferred type of packaging (e.g. 1 x 500 m drum or 5 x 100 m coils).
TERMI-POINT® is a registered trademark of AMP
Photographs and graphics are not to scale and do not represent detailed images of the respective products.

Similar products

- UNITRONIC® BUS LD refer to page 326

Accessories

- SKINTOP® MS-HF-M SC refer to page 707
- SKINTOP® MS-SC-M refer to page 701
- Multipurpose shears A and B
- STAR STRIP stripping tool refer to page 985
- STEEL GUN HT-338 cable tie pliers refer to page 1049
- LS steel cable ties refer to page 1047

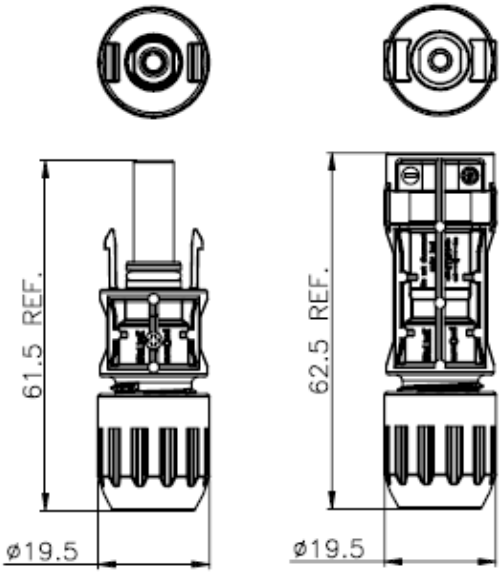

Drawing for ilustration only and does not represent the detailed image of the respective product.

1. Approval : TUV/UL

2. Technical Data

2.1.	Connector type	: Outward lock, Snap-in type
2.2.	Voltage rating	: TUV/UL 1500V
2.3.	Current rating	: TUV 70A/UL 50A
2.4.	Contact resistance	: typ. ≤0.3mΩ
2.5.	Rated impulse voltage	: 16kV (TUV)
2.6.	Degree of protection	: IP68 (1m, 24h)
2.7.	Housing material	: PPE(thermoplastic)
2.8.	Plating	: Tin
2.9.	For cable cross section/AWG	: TUV 2.5/4.0/6.0/10mm² UL 14/12/10/8AWG
2.10.	Cable diameter	: 4.5mm to 8.8mm
2.11.	Flammability class	: UL94V0
2.12.	Ambient Temperature	: -40°C to + 90°C

ref.:BL- S418F4B040

3. Dimensional Data

Part Nos.	Manufacturer Ref	Description
SOLAR FIELD MOUNT CONNECTORS		
8100575	S418-R1A-001	FIELD MOUNT CONN F 4-6 SQ MM CABLE OD 4.5-7.2MM
8100576	S418-R2A-001	FIELD MOUNT CONN M 4-6 SQ MM CABLE OD 4.5-7.2MM
8100577	S418-R1D-001	FIELD MOUNT CONN F 10 SQ MM CABLE OD 4.5-7.2MM
8100578	S418-R2D-001	FIELD MOUNT CONN M 10 SQ MM CABLE OD 4.5-7.2MM
TOOLS		
8100582	335000329	 CRIMP TOOL FOR 2.5, 4 & 6 MM2 CONN
8100579	335000413	 CRIMP TOOL FOR 10 MM2 R-TYPE CONN
8100580	335000903	 WRENCH TOOL FOR R-TYPE CONN
8100581	112G0-007328-R1	 MULTI-FUNCTION TOOL FOR R-TYPE CONN

ref.:BL- S418F4B040

4. Current Derating Curve

The current capacity is evaluated according to IEC60512-5-2:2002, operation current of the connector is limited by ambient temperature, over specification to use might bring high risk quality issue.

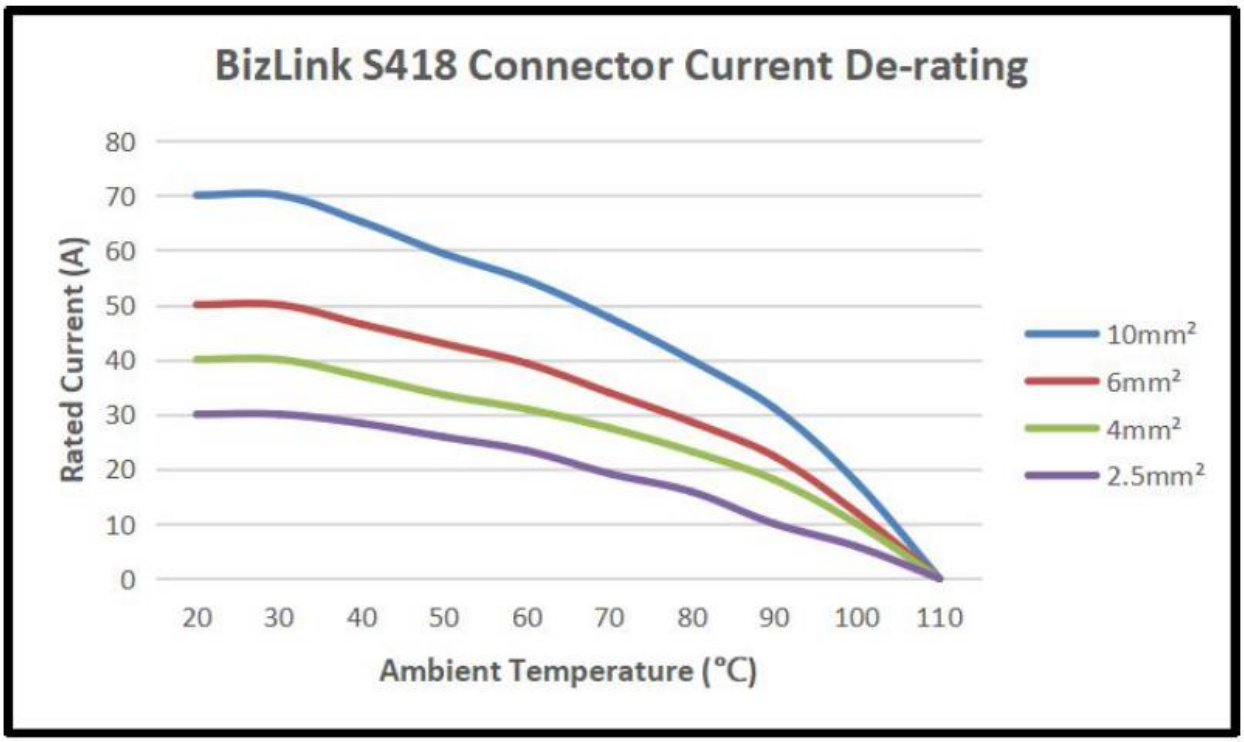

Note: LAPP is a distributor and not the manufacturer of the products listed in this document.